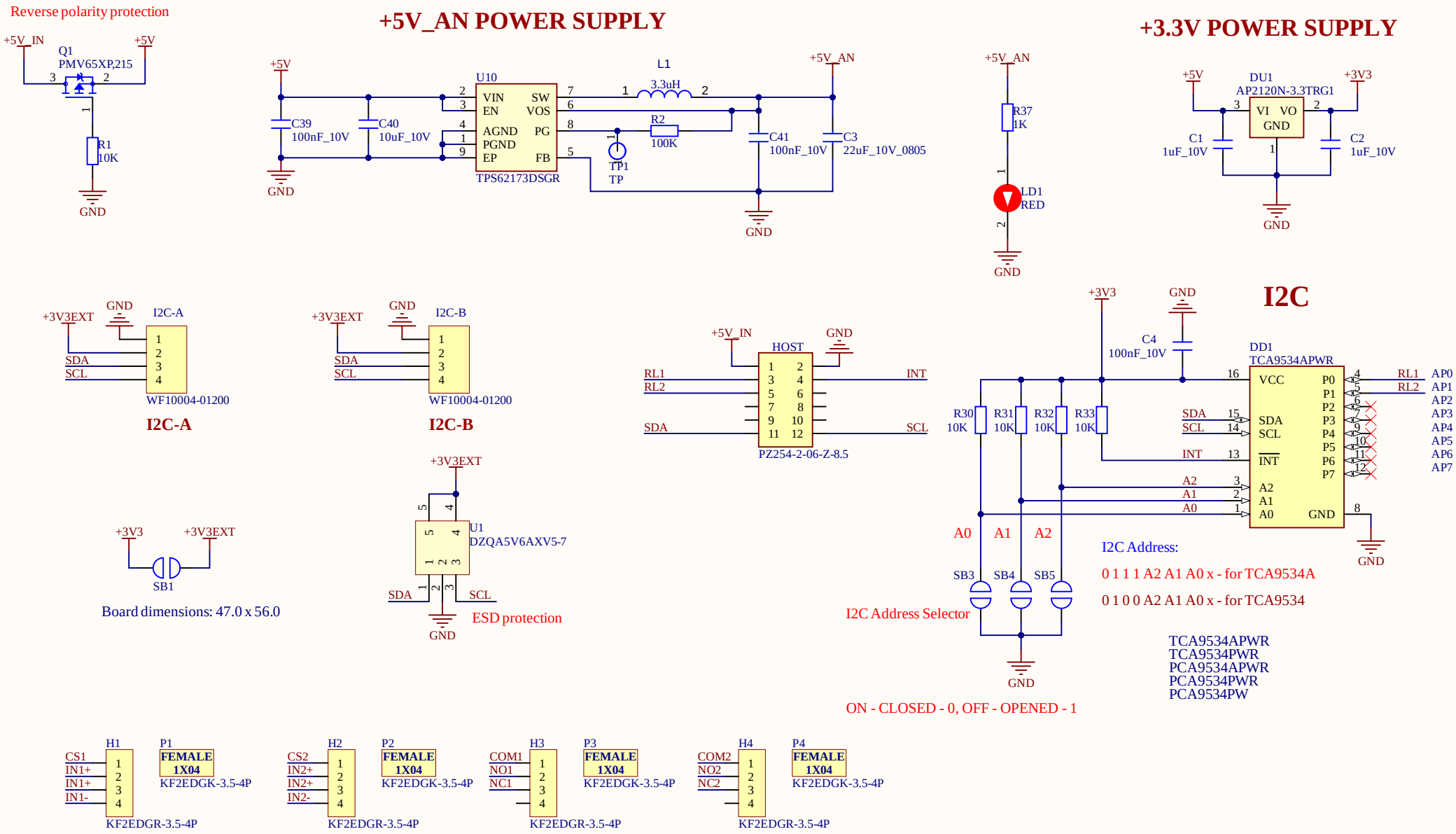
Reverse polarity protection
+5V_IN
Q1
PMV65XP,215
+5V
R1
10K
GND
+5V_AN POWER SUPPLY
+5V
C39
100nF_10V
C40
10uF_10V
U10
VIN
EN
AGND
PGND
EP
SW
VOS
PG
FB
TPS62173DSGR
L1
3.3uH
R2
100K
TP1
TP
C41
100nF_10V
C3
22uF_10V_0805
+5V_AN
R37
1K
LD1
RED
+3.3V POWER SUPPLY
+5V
DU1
AP2120N-3.3TRG1
VI
VO
GND
+3V3
C1
1uF_10V
C2
1uF_10V
I2C-A
+3V3EXT
SDA
SCL
WF10004-01200
I2C-B
HOST
RL1
RL2
INT
PZ254-2-06-Z-8.5
+3V3
SB1
Board dimensions: 47.0 x 56.0
U1
DZQA5V6AXV5-7
ESD protection
I2C
C4
100nF_10V
DD1
TCA9534APWR
VCC
P0
P1
P2
P3
P4
P5
P6
P7
SDA
SCL
INT
A2
A1
A0
GND
AP0
AP1
AP2
AP3
AP4
AP5
AP6
AP7
R30
R31
R32
R33
10K
SB3
SB4
SB5
I2C Address Selector
I2C Address:
0 1 1 1 A2 A1 A0 x - for TCA9534A
0 1 0 0 A2 A1 A0 x - for TCA9534
TCA9534APWR
TCA9534PWR
PCA9534APWR
PCA9534PWR
PCA9534PW
ON - CLOSED - 0, OFF - OPENED - 1
H1
P1
FEMALE
1X04
KF2EDGK-3.5-4P
CS1
IN1+
IN1+
IN1-
KF2EDGR-3.5-4P
H2
P2
CS2
IN2+
IN2+
IN2-
H3
P3
COM1
NO1
NC1
H4
P4
COM2
NO2
NC2

RELAY OUTPUTS

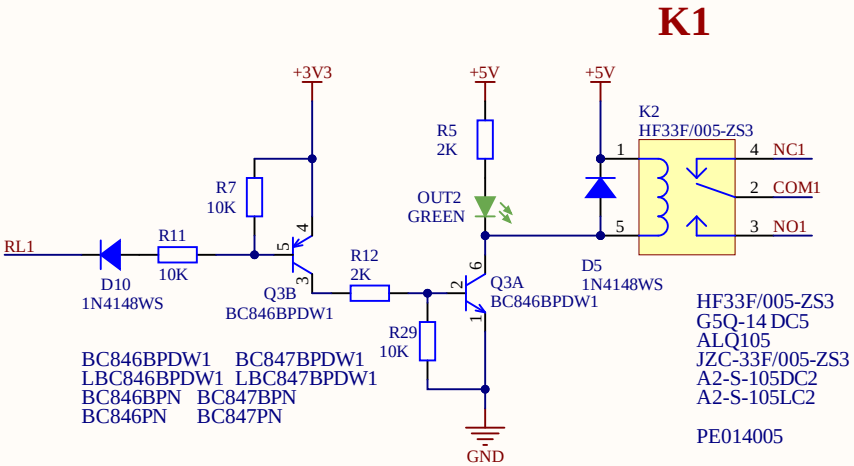

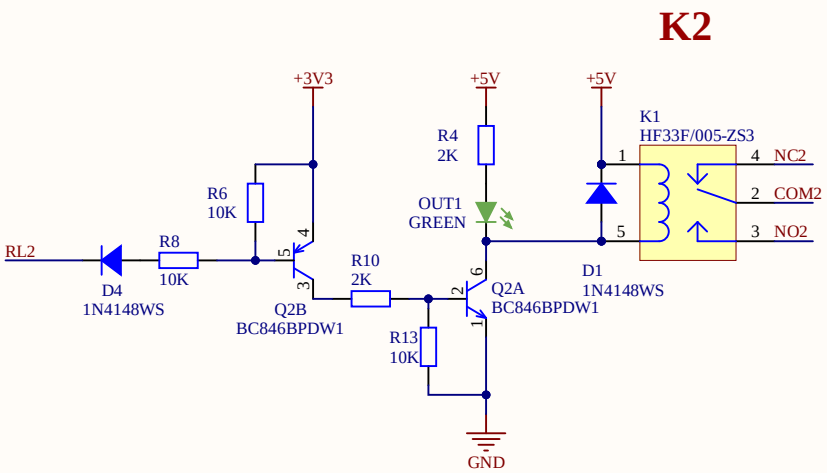
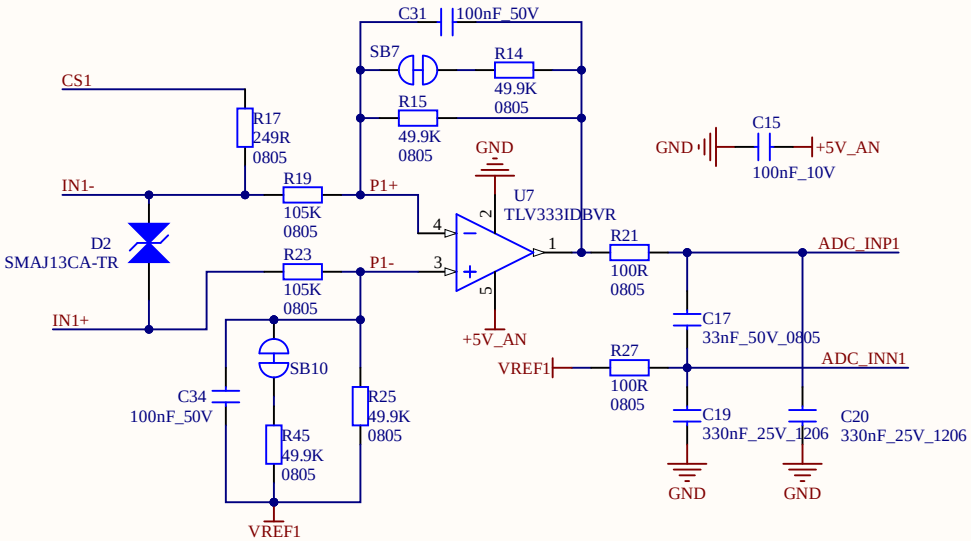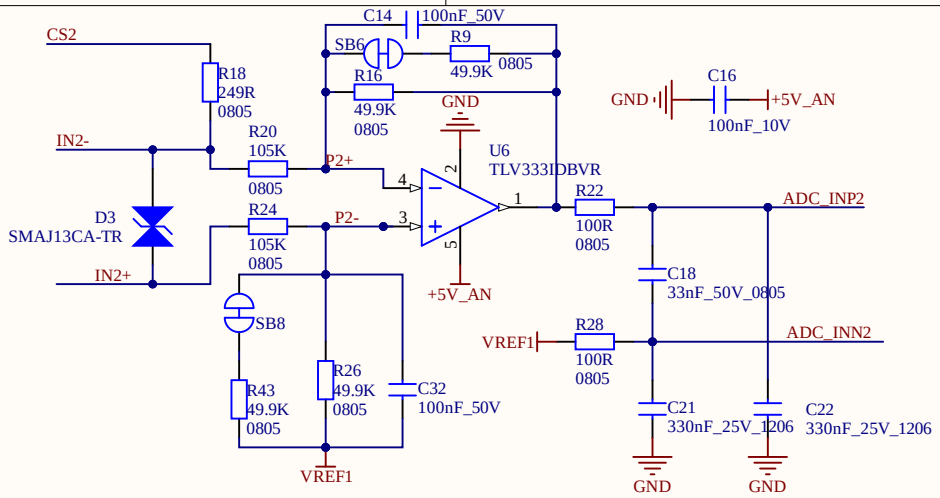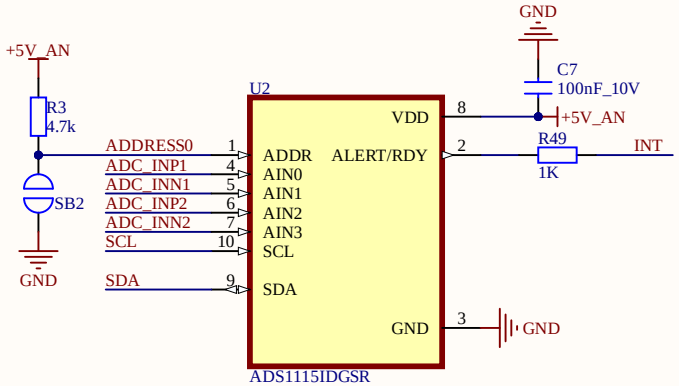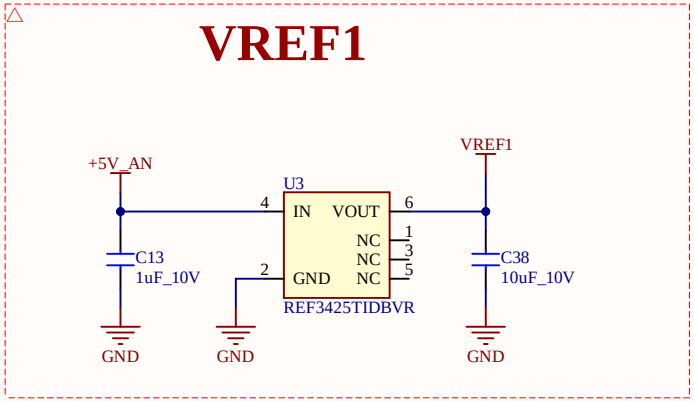
DIFFIRENTIAL AMPLIFIERS